Data sheet

valid from: 3/28/26

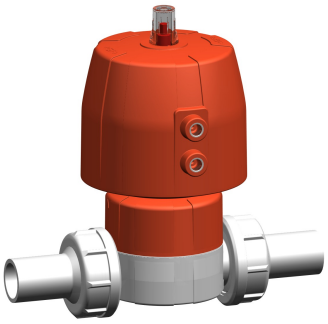

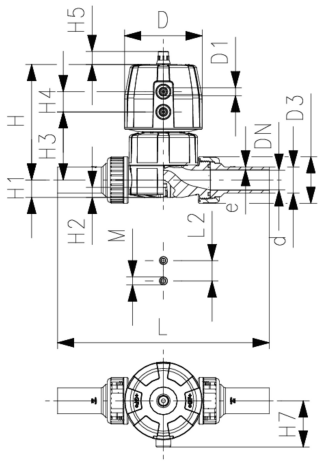

SYGEF Plus Diaphragm valve DIASTAR Ten
DA (Double acting)
Unions with butt fusion spigots metric

Model:

- Material: PVDF-HP
- Double flow rate compared to predecessor
- One housing nut replaces four screws
- Rotating air connection at 90° intervals
- For easy installation and removal
- Short overall length

Option:

- Individual configuration of the valve
- Comprehensive range of accessories available

Working Pressure: **one side**
*O-ring material: FKM white

d (mm)	DN (mm)	Size (inch)	PN (bar)	kv-value (Δp=1 bar) (l/min)	PTFE/ EPDM* Code	SP	Weight (kg)
20	15	½	10	125	**180 654 132**	1	0.695
25	20	¾	10	271	**180 654 133**	1	1.153
32	25	1	10	481	**180 654 134**	1	1.396
40	32	1 ¼	10	759	**180 654 135**	1	2.203
50	40	1 ½	10	1263	**180 654 136**	1	3.483
63	50	2	10	1728	**180 654 137**	1	4.525

d (mm)	D (mm)	D1_G (inch)	H (mm)	H1 (mm)	H2 (mm)	H3 (mm)	H4 (mm)	H5 (mm)	H7 (mm)	L (mm)	L2 (mm)	M	e (mm)	Lift = Hx (mm)
20	68	⅛	101	14	12	60	24	16	43	196	25	M6	1.9	7
25	96	⅛	132	18	12	73	25	16	57	221	25	M6	1.9	10
32	96	⅛	143	22	12	84	25	16	57	234	25	M6	2.4	13
40	120	⅛	173	26	15	99	26	26	69	260	45	M8	2.4	15
50	150	¼	214	32	15	119	36	26	69	284	45	M8	3.0	19
63	150	¼	226	39	15	132	36	26	69	321	45	M8	3.0	23

d (mm)	closest inch (inch)
20	½
25	¾
32	1
40	1 ¼
50	1 ½
63	2

The technical data are not binding. They neither constitute expressly warranted characteristics nor guaranteed properties nor a guaranteed durability. They are subject to modification. Our General Terms of Sale apply.

Georg Fischer Piping Systems Ltd, Postfach, CH-8201 Schaffhausen/SwitzerlandPhone +41 -(0)52-631 1111e-mail: info.ps@georgfischer.comInternet: http://www.gfps.com