Data sheet

valid from: 3/30/26



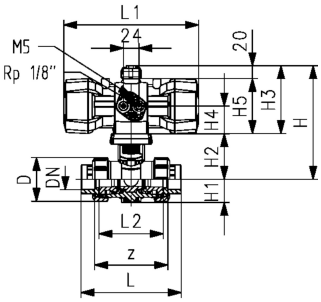

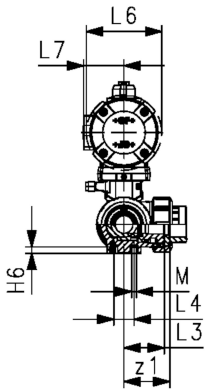

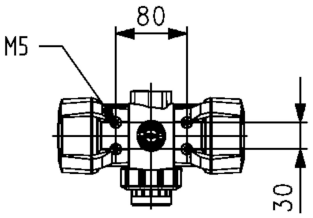

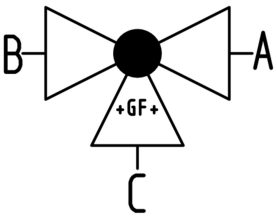

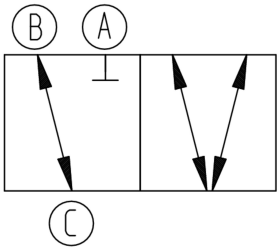

PROGEF Standard 3-Way ball valve type 543 Pro P
Horizontal/T-port
Without manual override
With threaded sockets reinforced Rp

Model:

- Material: PP-H
- Actuator fails safe to the closed position FC
- Control pressure supply through integrated NAMUR interface according VDI/VDE 3845 with 5.6 bar (81.2 psi)
- Basic position B-C opened, activated position A-B-C opened, see flow scheme
- Control time 90° <) 1-2s
- For easy installation and removal
- Integrated stainless steel mounting inserts
- Full plastic solution (actuator housing made of PP-GF)
- Visual position indicator
- Z-dimension, valve end and union nut are compatible with types 285 – 288 and 543 (1st Generation)

Option:

- Position feedback sensor, incl. LED feedback (DN10-50) - PNP, NPN and NAMUR
- Positioner RPC, RPC D, RPC PID
- Individual configuration of the valve

d (mm)	DN (mm)	Thread Type	Size (inch)	PN (bar)	kv-value (Δp=1 bar) (l/min)	EPDM Code	SP	Weight (kg)
16	10	Rp	⅜	10	140	**199 296 142**	1	1.031
20	15	Rp	½	10	200	**199 296 143**	1	1.035
25	20	Rp	¾	10	470	**199 296 144**	1	1.124
32	25	Rp	1	10	793	**199 296 145**	1	1.245
40	32	Rp	1 ¼	10	1290	**199 296 146**	1	2.210
50	40	Rp	1 ½	10	1910	**199 296 147**	1	2.499
63	50	Rp	2	10	3100	**199 296 148**	1	3.391

FKM Code	SP	Weight (kg)
199 296 152	1	1.031
199 296 153	1	1.035
199 296 154	1	1.124
199 296 155	1	1.245
199 296 156	1	2.210
199 296 157	1	2.499
199 296 158	1	3.391

Actuator	D (mm)	H (mm)	H1 (mm)	H2 (mm)	H3 (mm)	H4 (mm)	H5 (mm)	H6 (mm)	L (mm)	L1 (mm)	L2 (mm)	L3 (mm)	L4 (mm)	L6 (mm)
PPA08	50	157	28	62	95	41	75	8	112	159	72	36	25	74
PPA08	50	157	28	62	95	41	75	8	114	159	72	36	25	74
PPA15	58	179	32	71	108	45	88	8	131	211	85	43	25	94
PPA15	68	179	36	71	108	45	88	8	154	211	98	49	25	94
PPA40	84	215	45	84	131	56	111	9	180	246	118	59	45	120
PPA40	97	215	51	84	131	56	111	9	203	246	135	68	45	120
PPA40	124	237	65	106	131	56	111	9	258	246	176	88	45	120

L7 (mm)	M	z (mm)	z1 (mm)
32	6	86	43
32	6	84	42
38	6	99	50
38	6	112	56
47	8	132	66
47	8	153	77
47	8	196	98

The technical data are not binding. They neither constitute expressly warranted characteristics nor guaranteed properties nor a guaranteed durability. They are subject to modification. Our General Terms of Sale apply.

Georg Fischer Piping Systems Ltd, Postfach, CH-8201 Schaffhausen/SwitzerlandPhone +41 -(0)52-631 1111e-mail: info.ps@georgfischer.comInternet: http://www.gfps.com